Lifting Solutions Group
Axel Johnson International

VNMW/VSNMW vertical lifting clamps

Product information



General: VNMW/VSNMW pewag winner is a non-marking clamp with two special synthetic pads. The clamp can be used for lifting, handling and moving of (stainless) steel, aluminium, wood and marble plates and will not leave any marks. The clamp is locked in closed as well as in open position and is mounted in the crane hook by means of a lifting chain with reeving link.
No minimum WLL required

... *Read more*

Certex Lifting
info@certexlifting.com.au
1800 237 839

© November 2026 - All Rights Reserved

Lifting Solutions Group
Axel Johnson International

VNMW/VSNMW vertical lifting clamps

Blueprint

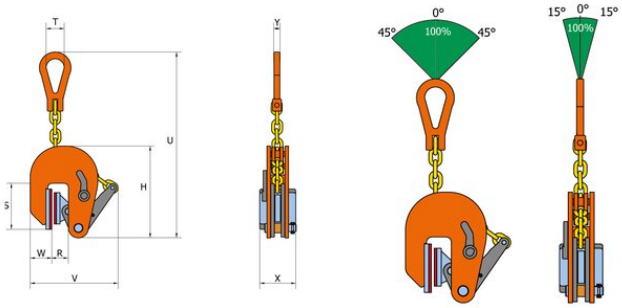

Technical data

Part Code	Code	WLL ton	Jaw width mm	H mm	S mm	T mm	U mm	V mm	W mm	X mm	Y mm	Weight (kg)
502100050200450	VNMW 0.5 t	0.5	1-20	205	102	40	462	224	48	80	14	6
502100050370450	VSNMW 0.5 t	0.5	17-37	205	102	40	462	241	48	80	14	6
502100100300450	VNMW 1 t	1	1-30	232	105	40	470	282	46	80	14	6.5
502100150400450	VNMW 1.5 t	1.5	1-40	232	105	40	470	282	46	80	14	6.5
502100200500450	VNMW 2 t	2	1-50	362	124	50	704	408	63	80	18	15
502100300600450	VNMW 3 t	3	1-60	362	124	50	704	408	63	80	18	15.5

Certex Lifting
info@certexlifting.com.au
1800 237 839

© November 2026 - All Rights Reserved