Lifting Solutions Group
Axel Johnson International

Thimble Heavy Duty Stub-end K2-B GN

Product information



Suitable for wire rope.
Standard certification : Certificate of Conformity

... *Read more*

Material: Mild steel.
Temperature range: -20°C up to +200°C
Finish: Galvanized.

Certex Lifting
info@certexlifting.com.au
1800 237 839

© November 2026 - All Rights Reserved

Lifting Solutions Group
Axel Johnson International

Thimble Heavy Duty Stub-end K2-B GN

Blueprint

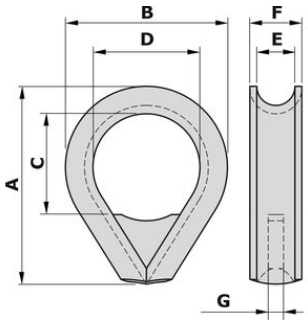

Technical data

Part Code	Rope diameter mm	A mm	B mm	C mm	D mm	E mm	F mm	G mm	Weight kg/100pc
123101500330	14-15	101.6	75	50	50	17	22	6	40
123101700330	16-17	114.3	85	50	53	19	25	6	50
123101900330	18-19	127	100	60	60	21	29	8	80
123102100330	20-21	139.7	110	60	65	23	33	8	90
123102300330	22-23	152.4	115	70	70	25	34	8	100
123102700330	24-27	177.8	135	75	80	30	38	10	170
123103000330	28-30	203.2	155	80	100	33	44	10	250
123103400330	31-34	228.6	175	110	115	38	49	10	400
123103700330	35-37	254	190	120	120	41	52	15	450
123104200330	38-42	279.4	210	120	130	46	60	15	700
123104700330	43-47	304.8	245	140	145	52	65	15	830
123105400330	48-54	355.6	260	155	155	60	72	20	1,250
123106300330	55-63	431.8	310	200	190	70	84	20	1,800
123107300330	64-73	482.6	350	235	230	81	119	20	3,050
123108300330	74-83	558.8	395	240	255	92	130	20	4,050
123109500330	84-95	609.6	430	275	280	105	145	25	4,950
123110900330	96-109	660.4	450	295	285	120	155	30	5,400

Certex Lifting
info@certexlifting.com.au
1800 237 839

© November 2026 - All Rights Reserved