Lifting Solutions Group
Axel Johnson International

Portable Swivel Davit SD125-250-500

Product information



The Swivel Davit is a very user-friendly standing crane. Lightweight and portable. The integrated winch and cable provide an ergonomic and modern look. Within 5 seconds this davit is ready for use.

Specifications:

- robust and safe lifting davit crane
- integrated winch and cable in a modern design
- easy to transport
- load pressure brake with double ratchet system for safe stable hold of the load in any position
- possible to rotate 360° due to the use of ball bearings
- adjustable crank
- 1 layer of paint

Optional:

- zinc-plated finish (6 - 8 micron) (EV)
- stainless steel grade SAE 316 (SST316)
- ATEX certified (EX)

Accessories:

- floor, wall and in-cement floor sockets
- carry bag and rain protection cover

... *Read more*

Marking: According to standard, CE-marked
Temperature range: -20°C up to +40°C
Finish: Standard paint finish in grey (RAL 7035) according to DIN 12944, C1M
Standard: EN 13157

Safety factor: 4:1

Certex Lifting
info@certexlifting.com.au
1800 237 839

© November 2026 - All Rights Reserved

Lifting Solutions Group
Axel Johnson International

Portable Swivel Davit SD125-250-500

Blueprint

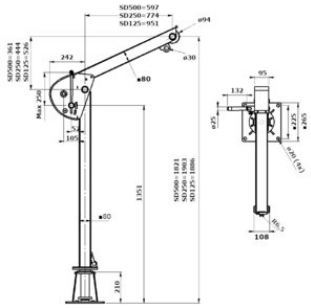

Technical data

Part Code	Code	WLL ton	Capacity top layer kg	wire rope capacity top layer m	Rope diameter mm	Max. Reach mm	Weight (kg)
601177001890	SD125	0.125	125	18	4	951 mm	30
601177001870	SD250	0.25	250	18	4	774 mm	30
601177001850	SD500	0.5	500	13	5	597 mm	30

Certex Lifting
info@certexlifting.com.au
1800 237 839

© November 2026 - All Rights Reserved